□□□□□

1□□□□□□□□□□□□□□□□□□□□□□M□N□□□□□□□□□□□□□□ □M□□□□□□□□□□□□□□□□□□□N□□□□□□□□□□□□□□□□□□□□□M□N□□X□□□□□□□□□□□□□□□□□□□□□（ ）

A□□□□M□□□□□□□□□□□□□□□□□□□□

B□□□□M□N□□□□□□□□□□□□□□□□□□

C□□□□M□RNA□□□□N□□□□□□□X

D□□□□M□N□□□□□□□□□□□□□DNA□□

2□□□□□□□□□□□□□□□□□□□□^{3}H□□□□□□□□^{35}S□□□□□□□□□□□□^{14}C□□□□□□□□^{32}P□□□□□□□□□□□□□□□□□□□（ ）

A□□□□□□□□□□□^{35}S□□□□□□□□□□□

B□□□□□□□□□□□□□□□□□^{3}H□^{35}S

C□□□□□□□□□□DNA□□^{14}C□^{32}P

D□□□□□□□□□□□□DNA□□□□□□□□□

3□□6□□□□□□□□□□□□□A□a□□□□□□□□E□e□□□□□□□□□□□□□□□□□□□□□□□1/100□

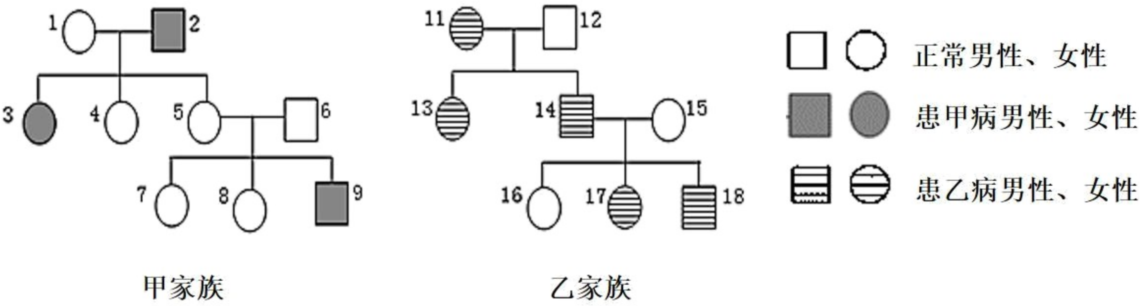

□□□□□□□□□（ ）

A□□□□□□□□□□□X□□□□□□□□□□□□□□□□□□□□□□□□□□□□□

B□□□□□8□□□□□□□□□□□□□□□□□□□□□□□□101/800

C□□7□□18□□□□□□□□□□□□□□□□□□□□□□□□□□□□□□□□□1/8

D□□9□□□□□□□□□□□□□□□□□□□□□□□□1/202

4□□□□□□□□□□□□□□□□□□□□□□□□□(T)□□X□□□□□□□□□X□□□□□□□ □□□□□□□□□(t)□□□□□□(X^{t}O)□□□□□□□□□□□□□□□□□□□□□()

A□□□□□□□□□□□□□□□□□□

B□□□□□□□□□□□□□□□2/3

C□□□□□□□□□□□□1/3

D□□□□□□□□□□□□□□□□□□□□5□□□□□□DNA□□

□□□□□

5[illegible]

[illegible]DNA[illegible]RNA[illegible]

[illegible]DNA[illegible]RNA[illegible]

[illegible]1[illegible]

①______________________________________[illegible]

②______________________________________[illegible]

③______________________________________[illegible]

[illegible]2[illegible]DNA[illegible]________________________________[illegible]

[illegible]3[illegible]RNA[illegible]________________________________[illegible]

[illegible]:

[illegible]____[illegible]

[illegible]A[illegible]B[illegible]C[illegible]A[illegible]B[illegible]C[illegible]

[illegible]

[illegible]

A[illegible]

[illegible]B[illegible]____,

[illegible]_____________[illegible]

[illegible]C[illegible]____,

[illegible]_____________[illegible]

6[illegible]

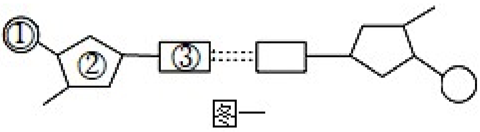

图一

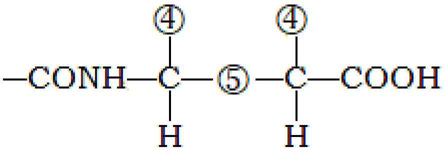

图二

图三

[illegible]1[illegible]^{35}S[illegible]________[illegible]^{32}P[illegible]DNA[illegible]________[illegible]

[illegible]2[illegible]____________________________[illegible]______________[illegible]

[illegible]3[illegible]____[illegible]

[illegible]4[illegible]_____[illegible]“[illegible]”[illegible]“[illegible]”[illegible] ________[illegible]

□5□□□□□□□ ^{32}P □□□□□□□□□□□□□□

① □□□□□□□□□□□□□□□ 0□□□□□______________________________□

② □□□□□□□□□□□□□□□□□□□□□□□□□□□□□□□□□□□□□

a□□□___________________________□

b□□□□□□□□□□□□□□□□□□□□□□□□□□□□□□□ ____________□□“□”□“□□”□□□□□□□□□□___________________________□

7□□□A□a□□□□□□□□□□□B□b□□□□□I$_{□}$□□□□□□□□□□□□□□□□□□

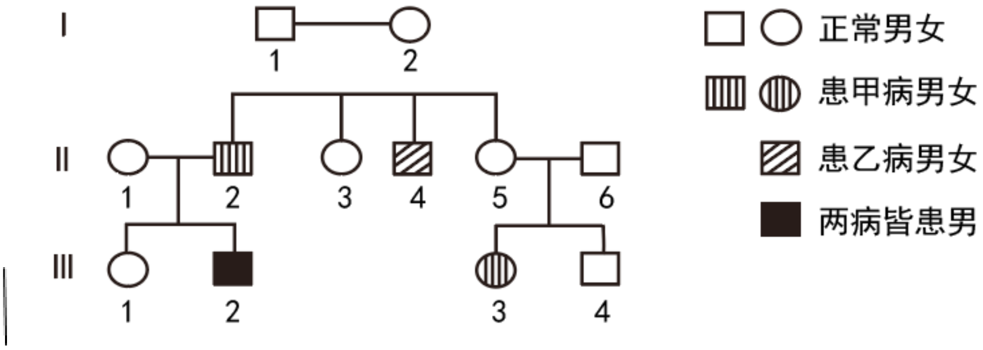

□1□□□□□□□□□□_______________□□□□□□□□□_________________□

□2□□□□□□□Ⅱ$_{□}$□□□□□___________________□□Ⅱ$_1$□Ⅱ$_2$□□□□□□□□□□□□□□_____________□

□3□□Ⅲ$_1$□Ⅲ$_4$□□□□□□□□□□□□□□____________□Ⅲ$_2$□□□□□□□□□□□□□□□□□__________□□□□□□

8□□□□□□□□□□□□□□□□□□□□H□h□□□□□□□□□□□T□t□□□□□□□□□1□□2□□□□□□□□□□□□□□□□□□□□□□□□□□□□□□□□□□□□□□□

□□□□□□□Hh□□□□□10$^{□4}$□□□□□□□□□

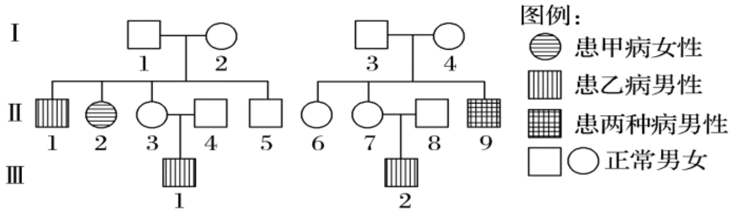

图1

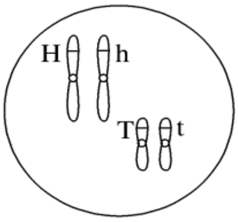

图2

□Ⅰ$_3$□□□□□□□□□□□□□□□□□

□1□□2□□□□□□□□□□□□□□□□□□□□□□□□□□□□__________□□

□2□Ⅱ$_5$□□□□□________□□□Ⅱ$_5$□Ⅱ$_6$□□□□□□□□□□□□□□□□□□□□□□________□

□3□□□Ⅱ$_7$□Ⅱ$_8$□□□□□□□□□□□□□□□□□□□□__________□

□4□□□Ⅱ$_5$□h□□□□□□□□□□□□□□□□□□□□□□□□□□□□h□□□□□________

□□□□

1□C

2□A

3□B

4□B

5□□□□□□□□□□□□□□□□□ □□□□□□□□□□□□□□□□□□□□□□□ □□□□□□□□□□□□□□□□□□□□□□□□□□□□□□□ □□□□□□□□□□

[illegible]DNA[illegible]DNA[illegible]DNA[illegible] [illegible]RNA[illegible]

RNA[illegible]RNA[illegible] [illegible]DNA

[illegible]RNA[illegible] [illegible]+DNA[illegible] DNA [illegible]+RNA[illegible] RNA

6[illegible]④ ① [illegible]DNA[illegible] [illegible] [illegible]

[illegible] [illegible] [illegible] [illegible]^{32}P[illegible]DNA[illegible]

[illegible] [illegible] [illegible] [illegible]

7[illegible] [illegible]X[illegible] AaX^BX^B[illegible]AaX^BX^b 5/8 35/48 6

8[illegible]3 HHX^TY[illegible]HhX^TY 1/36 1/60 000 3/5